Horse Stall/Stable

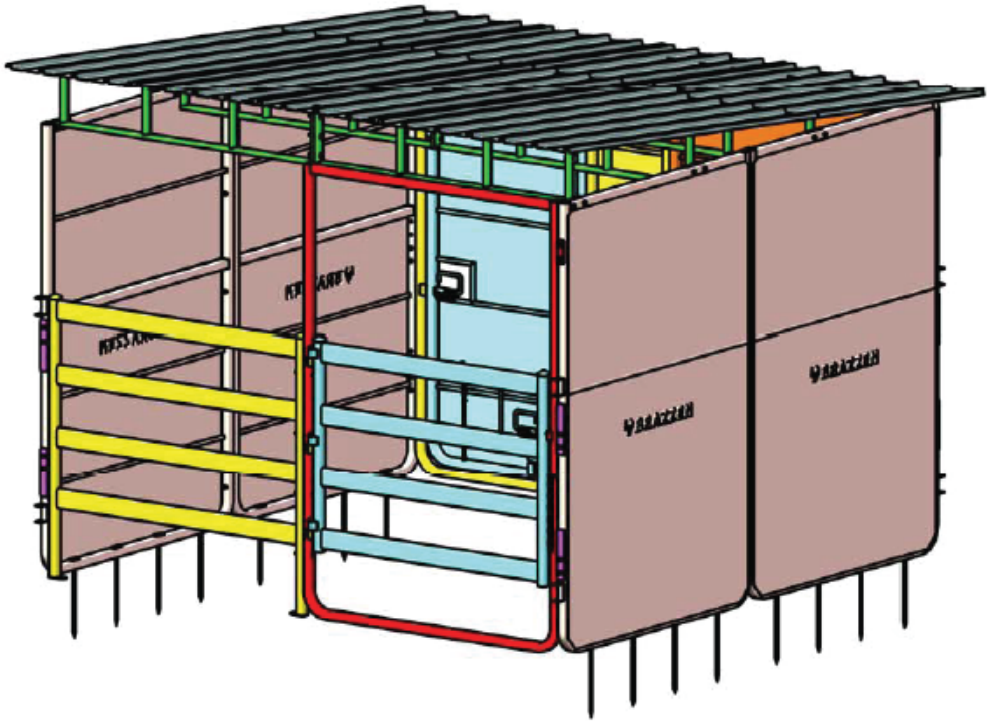

Tools Recommended To Use

Long Ladder

Long Socket for Drill
(19mm or 3/4 inch to fit Rattle Gun)

Socket for Roof Sheet Screws
(8m or 5/16 inch)

Forklift or
Two people

Rubber Hammer

Battery Rattle Gun/
Impact Wrench Drill

Hole Poker would help to line
up the holes for the bolts

Ring Wrench/Spanner
(19mm or 3/4 inch)

6 X Panels

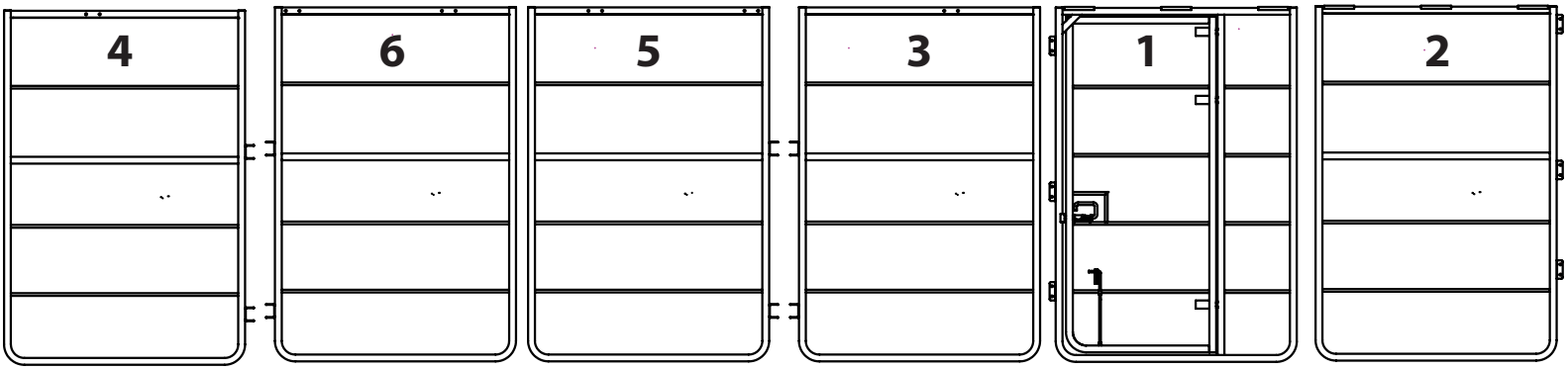

1 X Front Panel

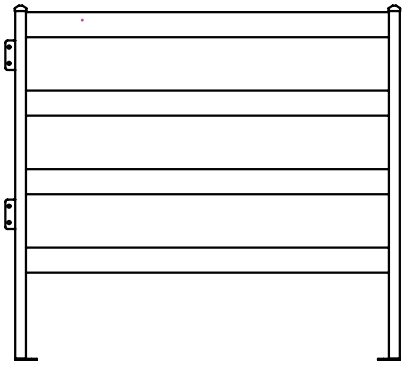

1 X Front Gate

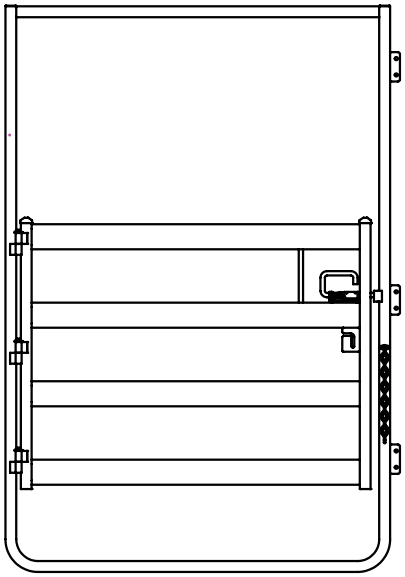

12 x Roof Sheets

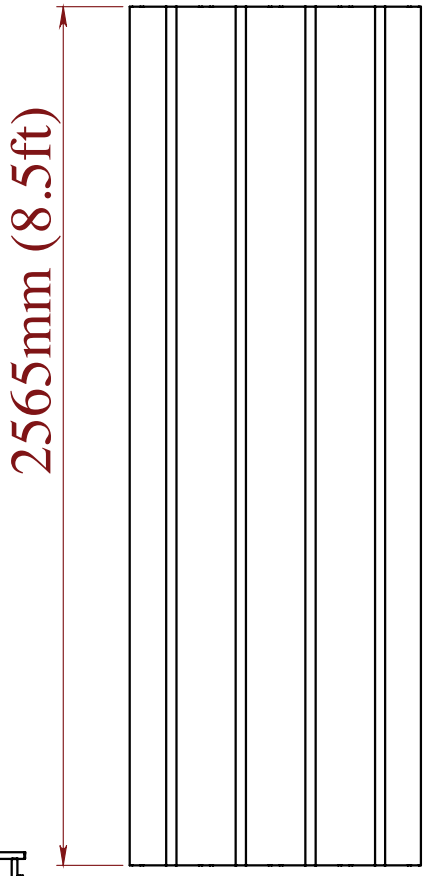

- 70 x Tapping Screw
- 19 x Bolt 120mm (4.7”)
- 43 x Bolt 70mm (2.7”)
- 62 x Nuts

6 x Trusses

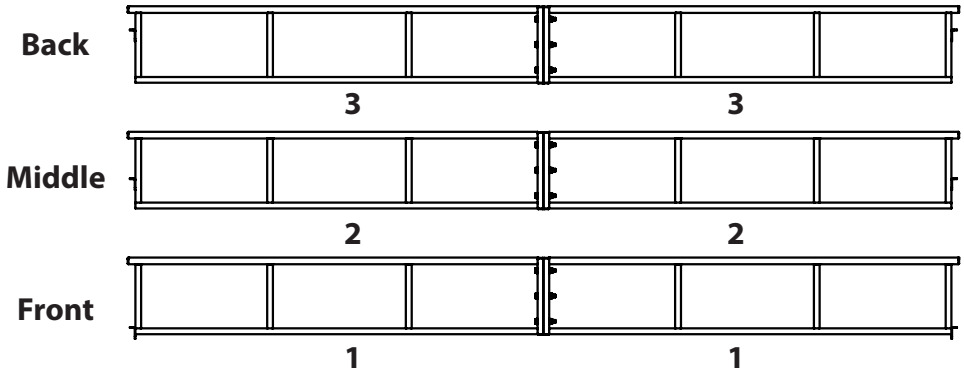

10 x Flange Bolt Cover

Take door panel 1 and bolt to panel 4 to make a L shape.

Place flange covers over the flange and the excess holes that are used for joining multiple stalls.

Using the 70mm (2.7”) bolts making sure the sheet faces out.

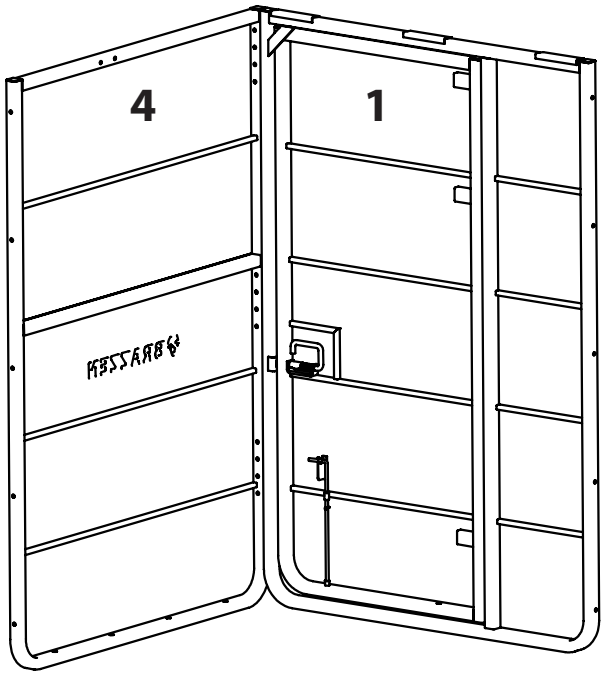

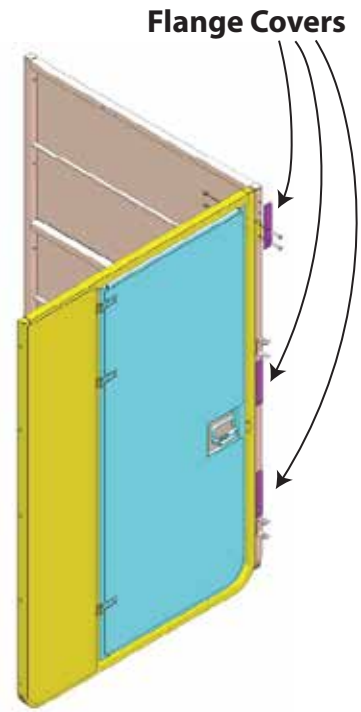

Then add panels 6 & 2

All panels are bolted.

C Lugs pointing at the front and at the back.

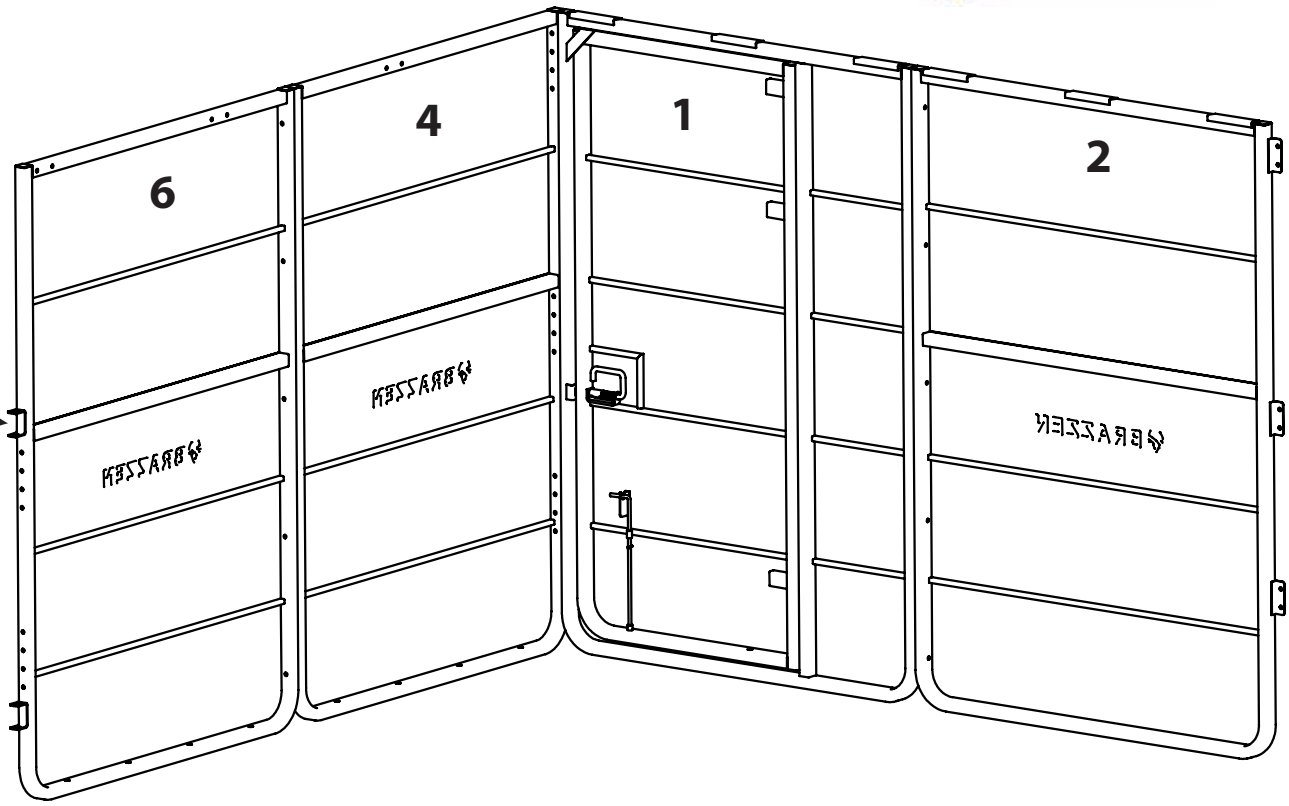

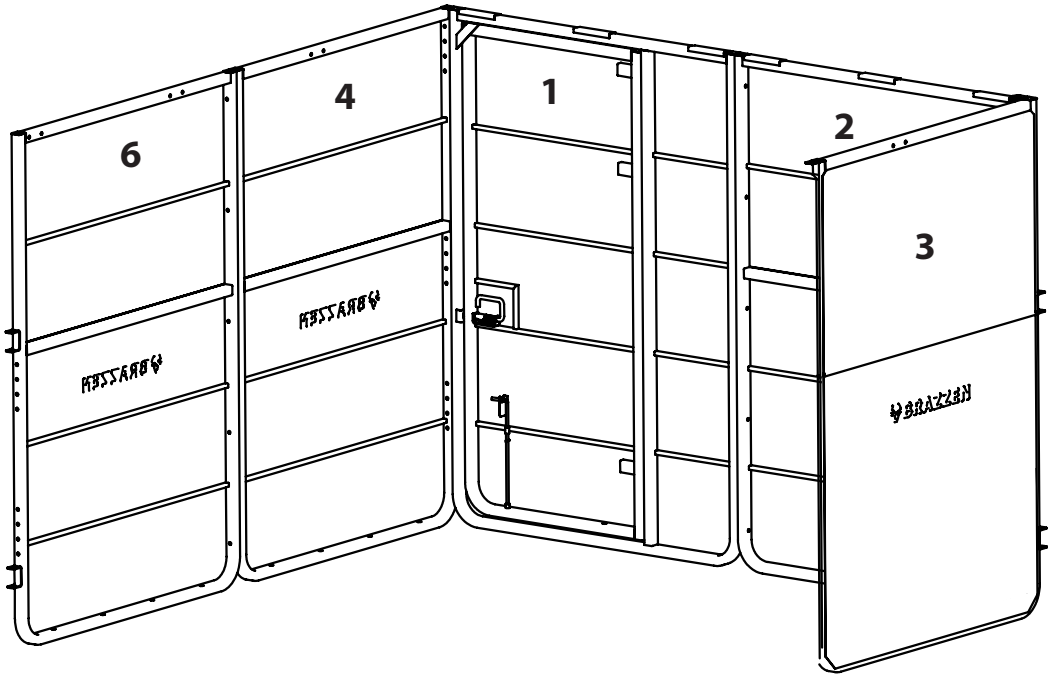

Bolt Panel 3 to panel 2 and place flange covers.

Bolt on Panel 5 to 3

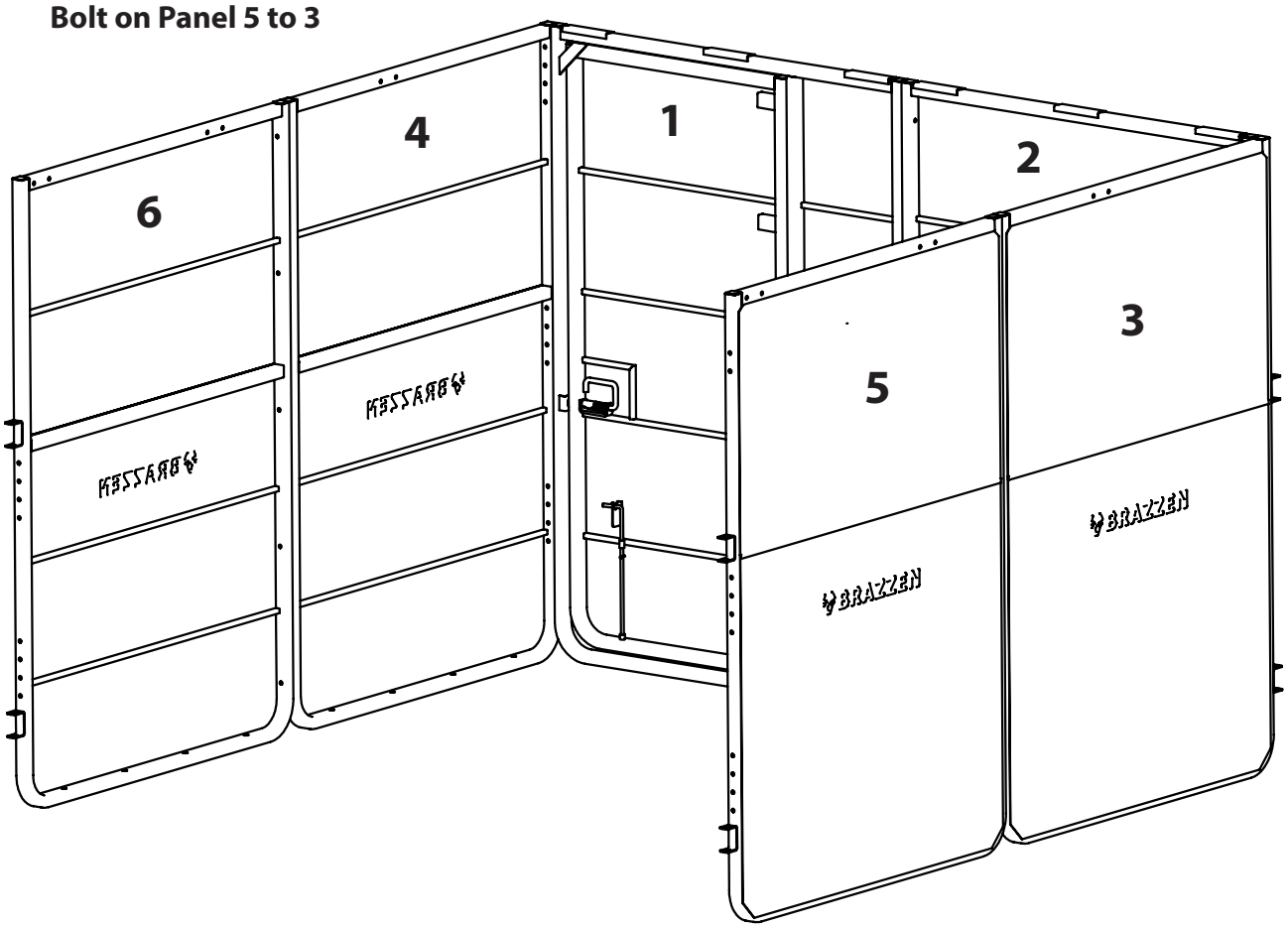

Bolt the railed panel to panel 6 using the flanges, with the shorter bolts. The flange cover can be bolted on at the same time.

Bolt the gate to panel 5 using the shorter bolts, and place the flange covers on.

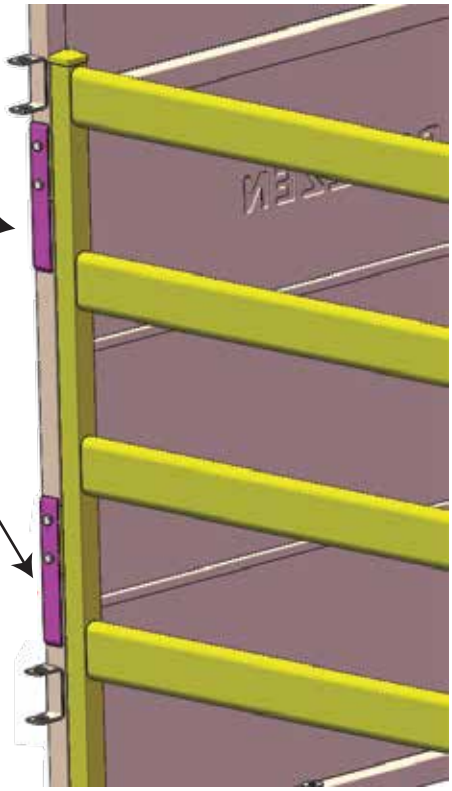

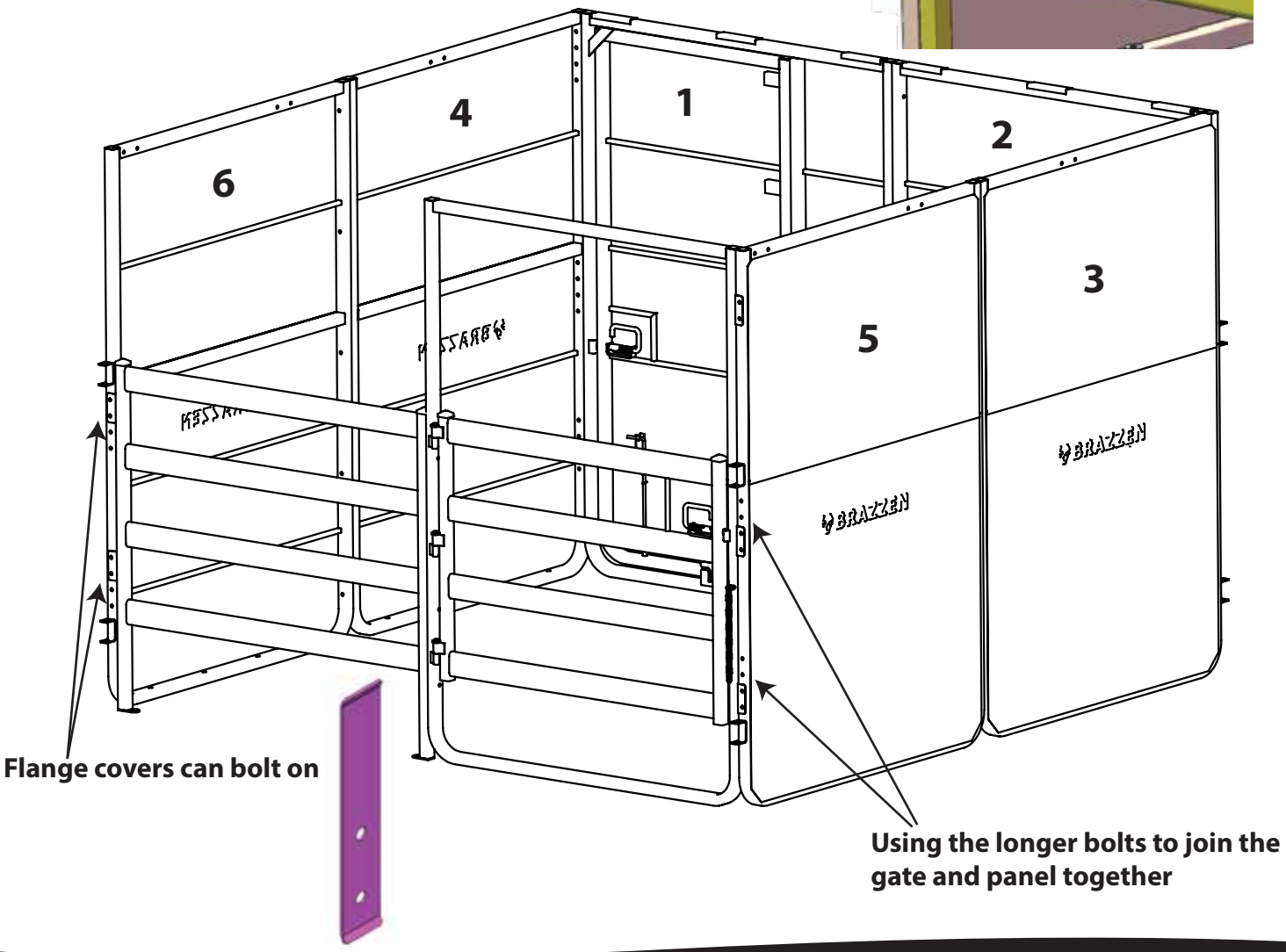

There are 6 trusses and trusses 1, 2 & 3 need to be bolted together.

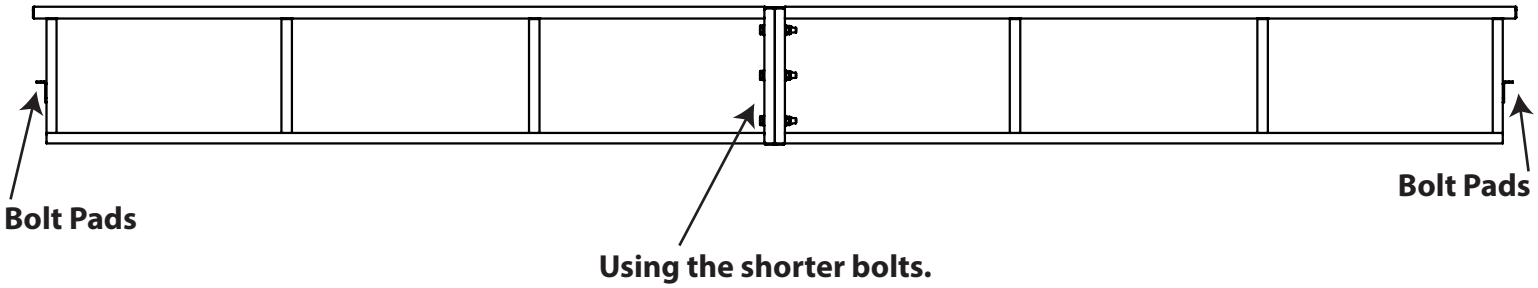

The top of the trusses are slightly angled so the roof sheets fit flat on it.

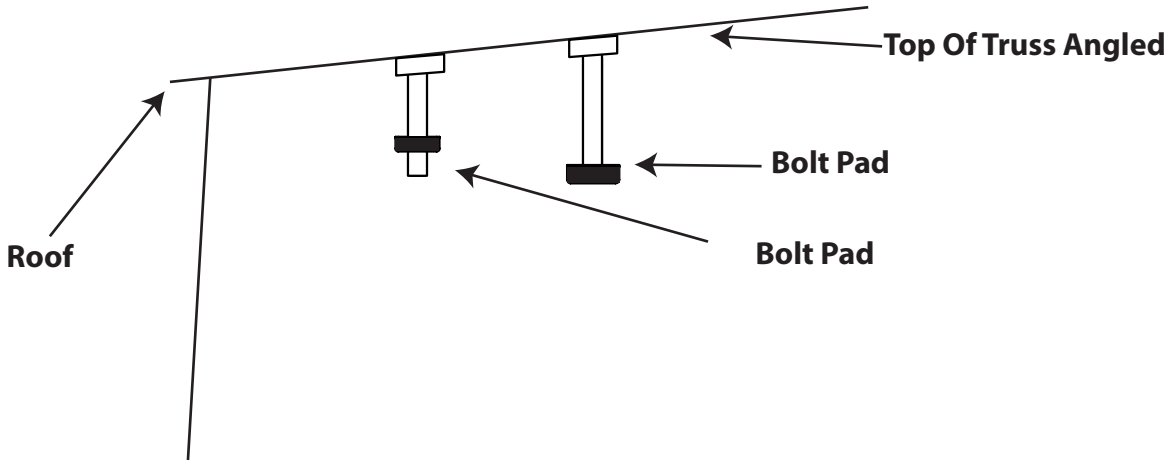

Place Truss 1 at front making sure it has the top rail sloping from front to back for the roof to sit flat.

Bolt together using the shorter bolts.

You can put truss 1 on first and work your way to the back, then 2 & 3 if you prefer.

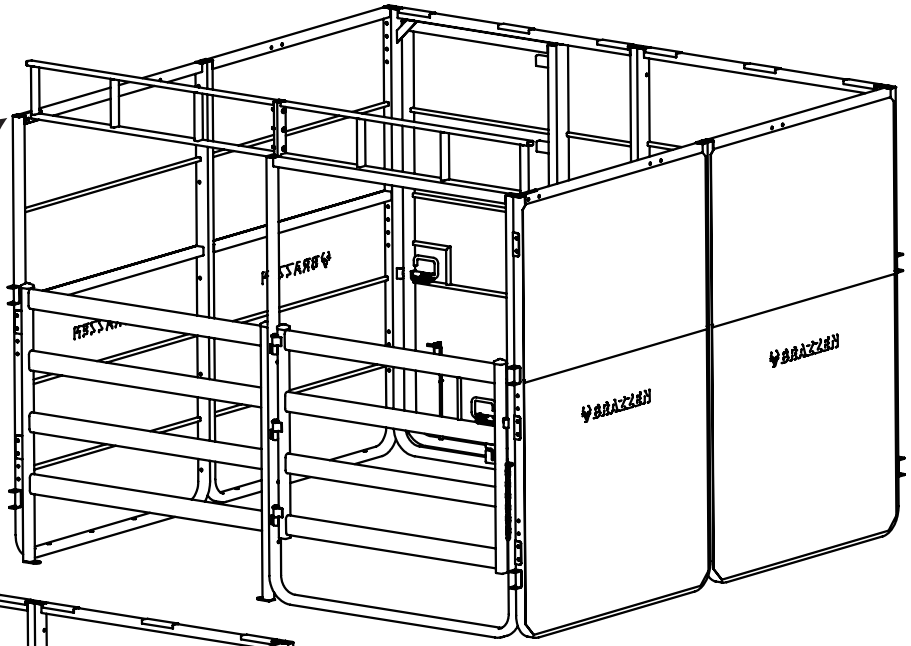

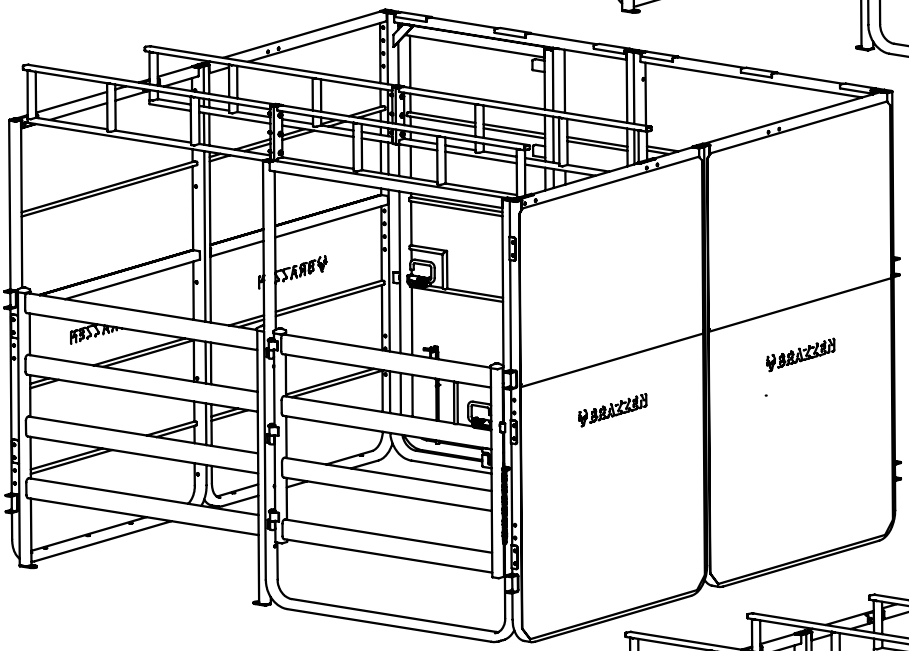

Then bolt truss 2.

Bolt truss 3.

On top of the back panels 1 & 2 are a metal strip and this also acts as the back truss.

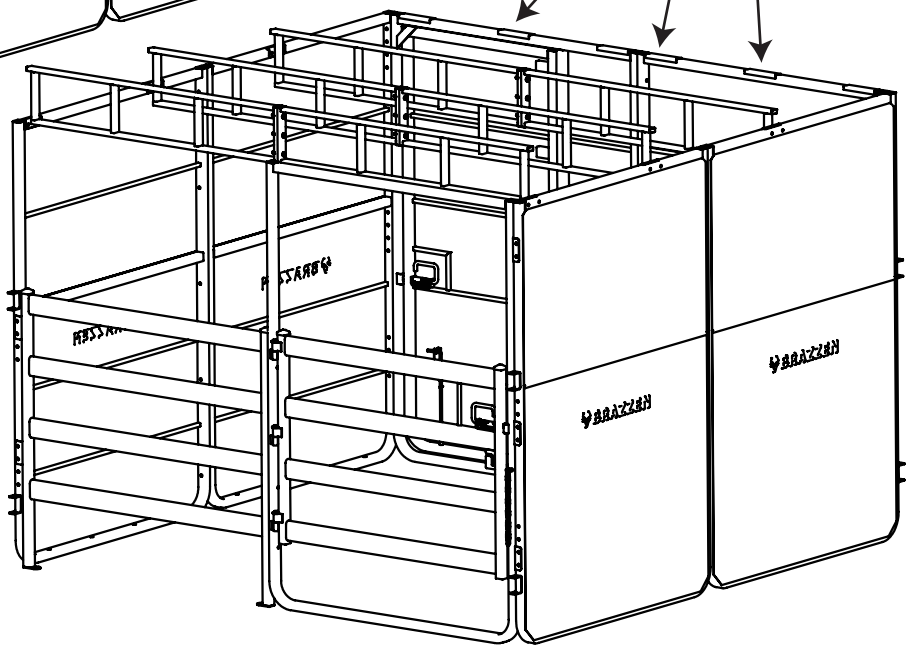

There are 12 sheets of roofing. It is best to start with the larger sheets at the back. Place one sheet at the back with about 250mm or 10 inches hanging at the back and 127mm & 5 inches at the side.

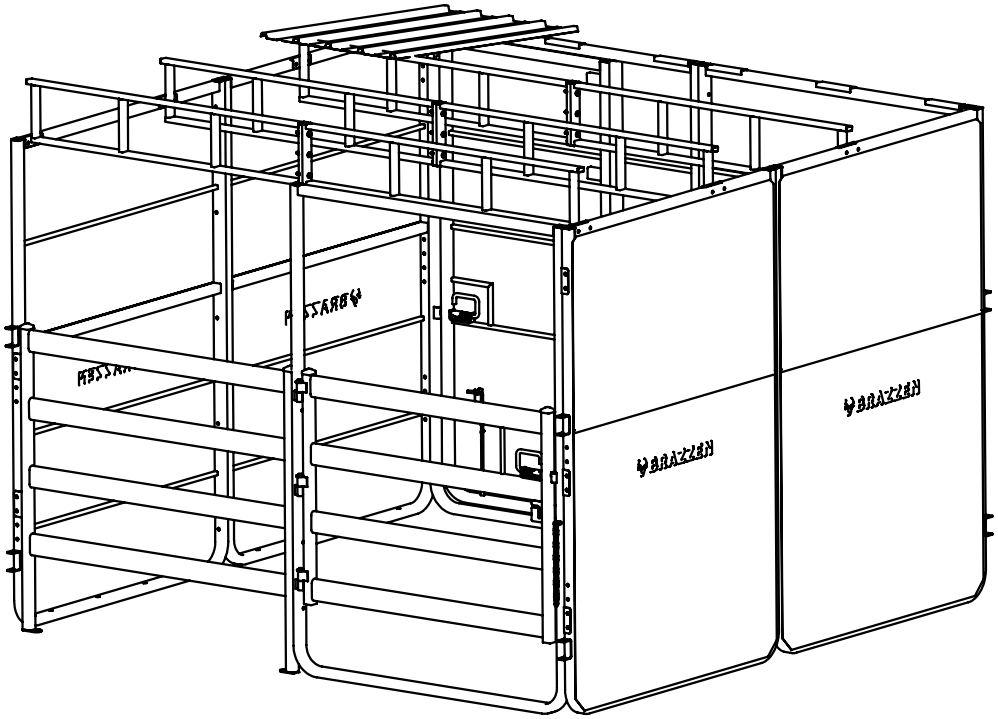

Looking down on the roof.

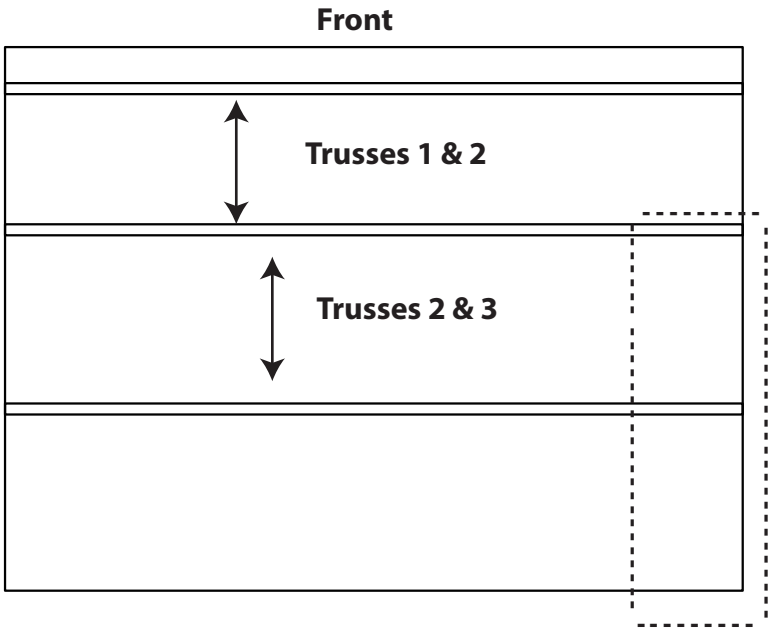

Just place one sheet on and drill one screw into each truss front and back until the other sheets are all on.

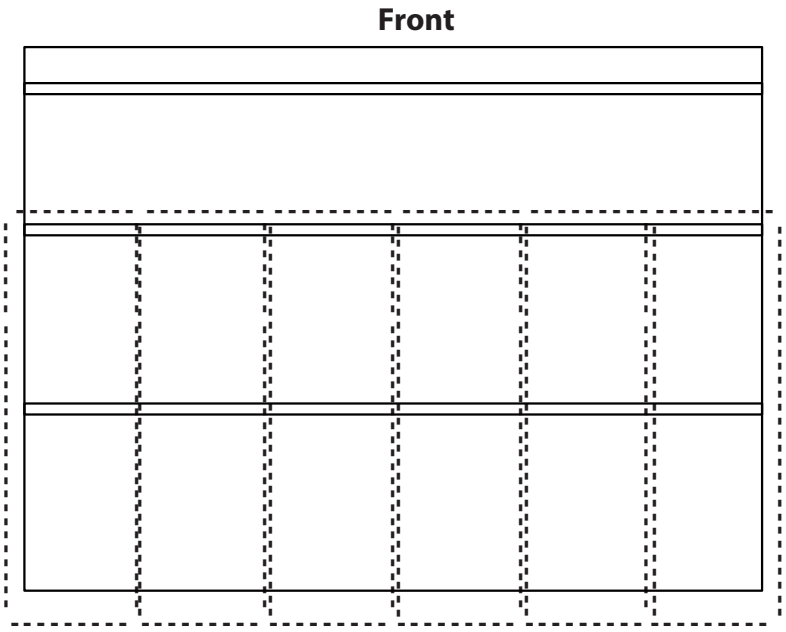

Each sheet will need to overlap the other

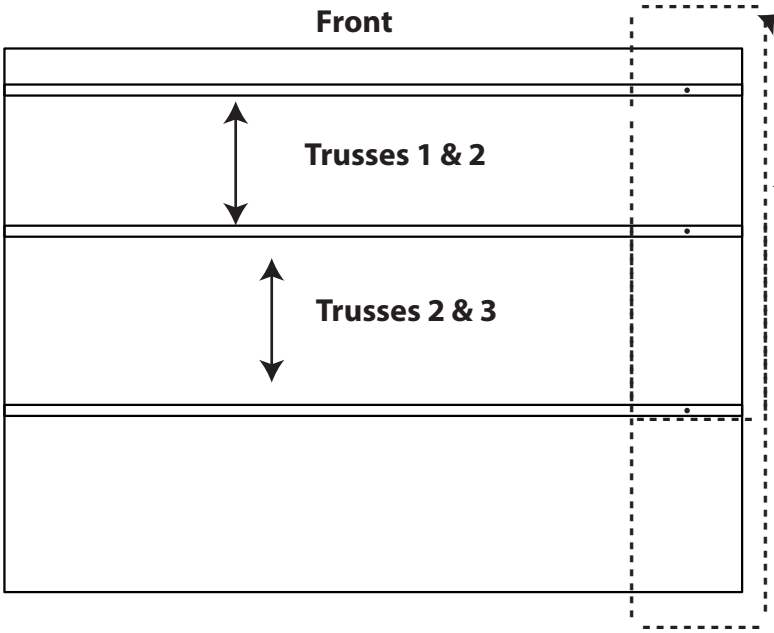

12 inch overhang

Front panel overlaps the back sheets

One screw in each truss until all sheets are in place

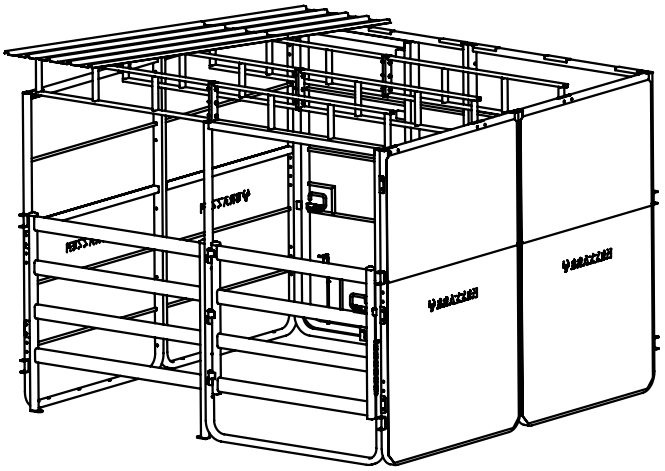

When all sheets are placed on the trusses, screws can then be placed at least 3 on each sheet on each truss.

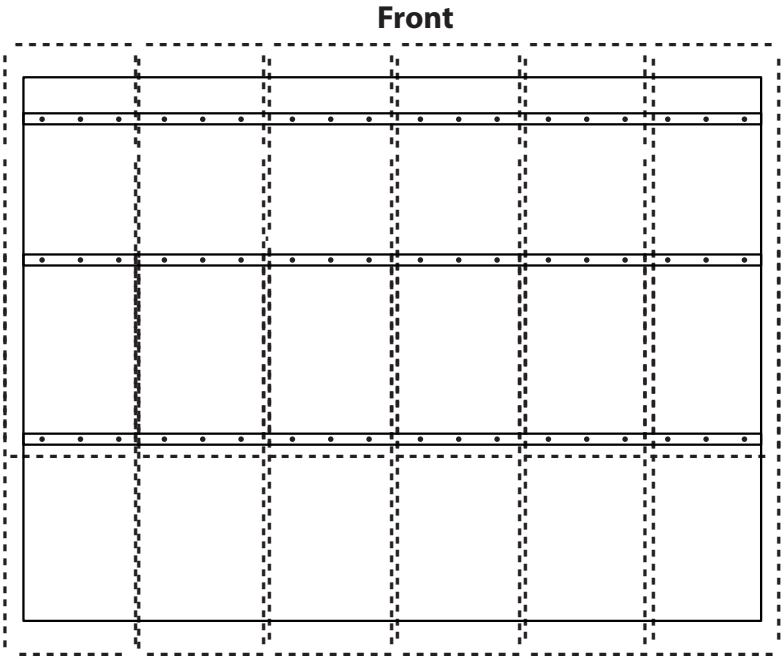

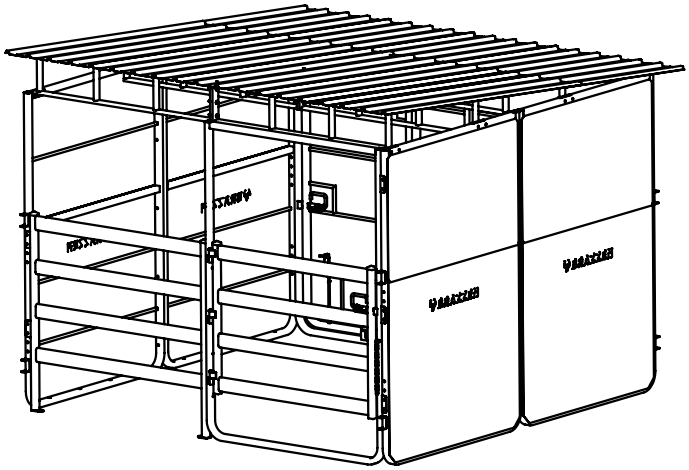

Optional Extras

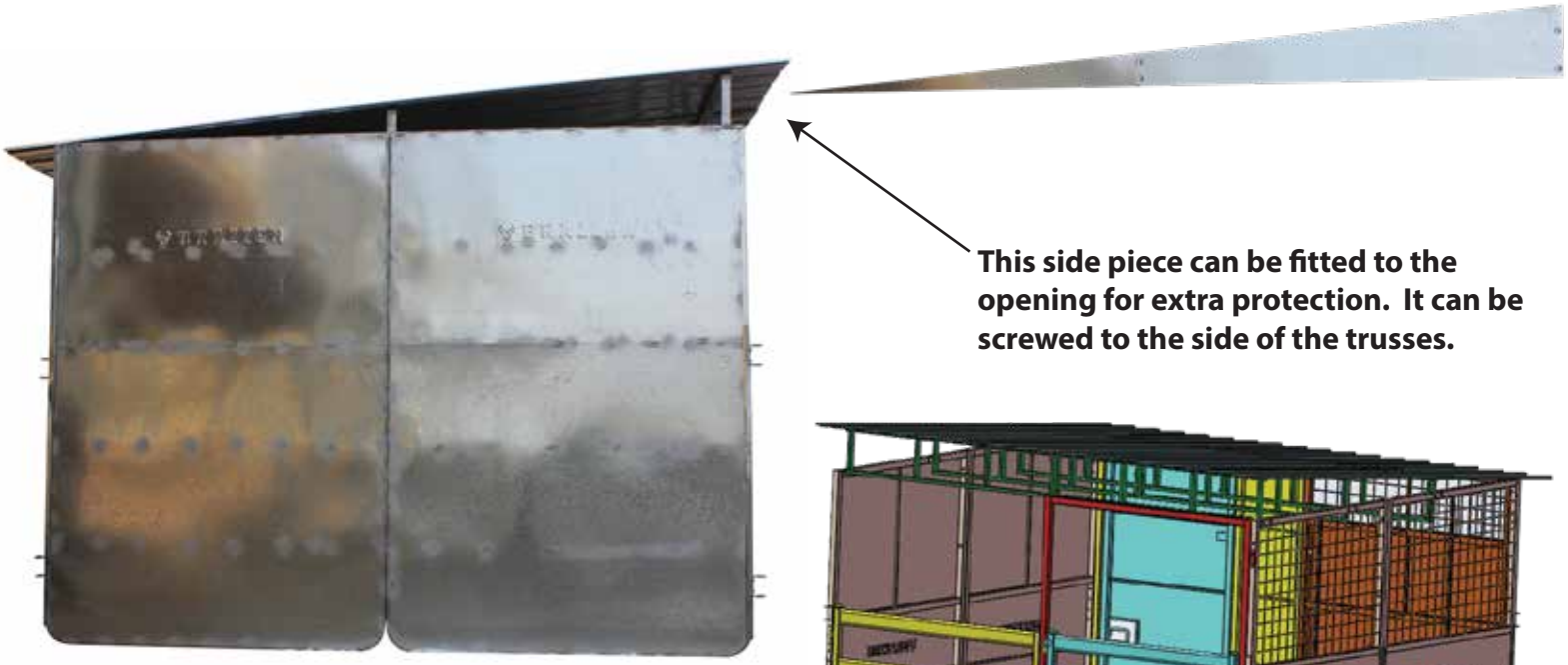

This side piece can be fitted to the opening for extra protection. It can be screwed to the side of the trusses.

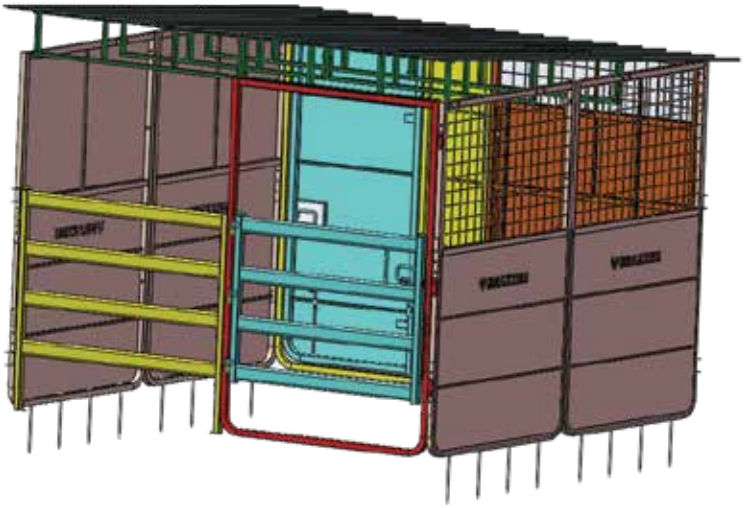

There is an option to have a mesh on one side outer wall for the warmer areas

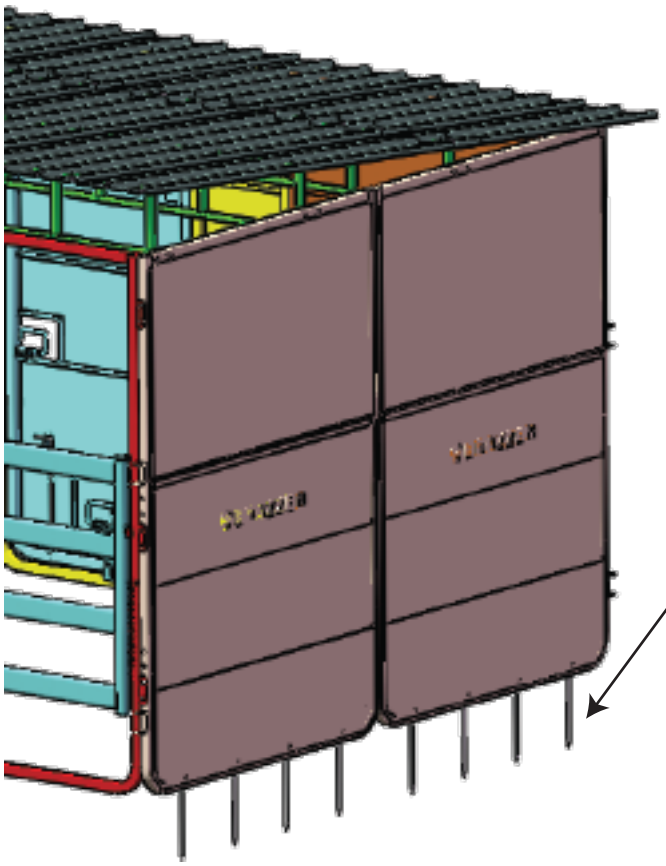

Anchors can be fixed in the holes provided at the bottom of the frame.